The Halo Fixator

Christopher M. Bono, MD

Abstract

The halo fixator may be used for the definitive treatment of cervical spine trauma, preoperative reduction in the patient with spinal deformity, and adjunctive postoperative stabilization following cervical spine surgery. Halo fixation decreases cervical motion by 30% to 96%. Absolute contraindications include cranial fracture, infection, and severe soft-tissue injury at the proposed pin sites. Relative contraindications include severe chest trauma, obesity, advanced age, and a barrel-shaped chest. In children, a computed tomography scan of the head should be obtained before pin placement to determine cranial bone thickness. Complications of halo fixation include pin loosening, pin site infection, and skin breakdown. A concerning rate of life-threatening complications, such as respiratory distress, has been reported in elderly patients. Despite a paucity of contemporary data, recent retrospective studies have demonstrated acceptable results for halo fixation in managing some upper and lower cervical spine injuries.

Dr. Bono is Chief, Orthopedic Spine Service, Department of Orthopedic Surgery, Brigham and Women's Hospital, and Assistant Professor, Orthopedic Surgery, Harvard Medical School, Boston, MA.

Neither Dr. Bono nor a member of his immediate family has received anything of value from or owns stock in a commercial company or institution related directly or indirectly to the subject of this article.

Reprint requests: Dr. Bono, Department of Orthopedic Surgery, Brigham and Women's Hospital, 75 Francis Street, Boston, MA 02115.

J Am Acad Orthop Surg 2007;15:728-737

Halo fixation marked an important advancement in the treatment of cervical spine disorders. Initially intended for stabilizing cervical spine fusions in the patient affected by poliomyelitis,[1] halo fixation became popular for managing traumatic cervical spine injury. Before the development and refinement of rigid internal fixation methods, the halo fixator served as a first-line means of stabilizing the cervical spine. It became the treatment of choice for a range of cervical injuries.

Halo fixator use has decreased over the past decade, largely as the result of improvements in internal fixation of upper and lower cervical spine fracture. The halo continues to be an important tool for cervical spine fracture management, however. Beyond acute trauma, it can be used postoperatively to provide additional stability after complex cervical procedures, such as multilevel corpectomy and strut grafting. Preoperatively, halo fixation may be used to achieve gradual correction of spinal deformity.

Clinical Indications

Cervical Spine Fracture and Dislocation

The halo fixator consists of the following components: ring, skull pins, vest (with detachable anterior and posterior portions), vest lining/padding, upright longitudinal struts, and anteroposterior fixation rods (which attach the ring to the longitudinal struts) (Figure 1).

A halo fixator can be used to achieve temporary reduction and stabilization of occipitoatlantal injuries that likely will require surgery for definitive treatment (eg, traumatic atlantoaxial instability). Halo fixation often is used to temporarily stabilize occipitocervical dissociation. However, at least one bio-

Figure 1

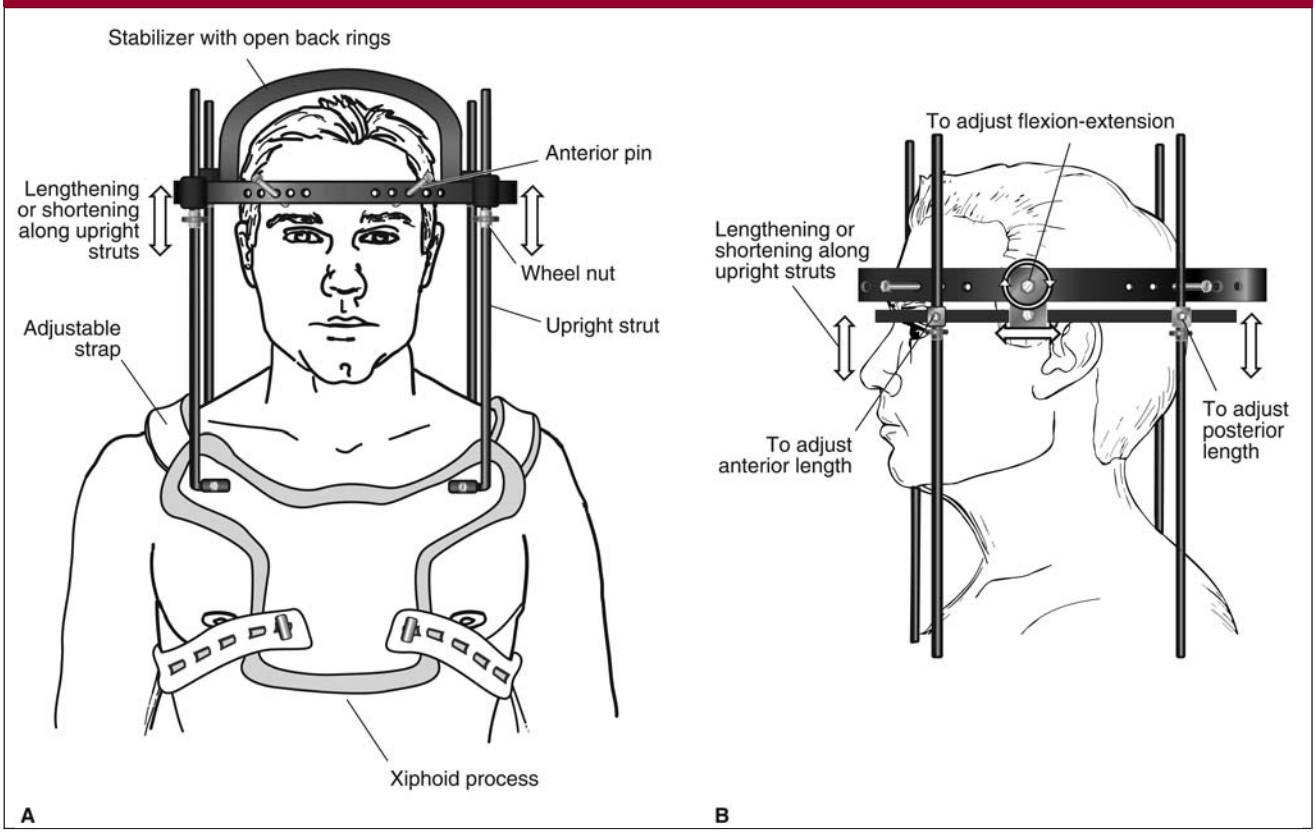

A, Frontal view of the components of a halo device in place. **B,** Side view of the upper components of a halo device in place. Angular (circular arrow), anteroposterior translational (left-to-right arrow), and axial lengthening and shortening (up-and-down arrow) adjustments can be made.

mechanical study suggests that the device actually may increase motion at the occiput-C1 junction.[2] Often preceded by a period of traction, halo fixation can be used to definitively treat C1 burst (Jefferson) fracture and type II and III odontoid fractures. By design, halo fixation is best used for correcting angular and translational deformities at the fracture site.

Halo use in the elderly is controversial. Recent evidence demonstrates an unacceptably high mortality rate in patients aged 79 years and older (21%).[3] Halo fixation is considered the treatment of choice for type II (angulated and translated) and IIA (angulated without translation) hangman's fractures (fracture of C2 axis). For type II fracture, temporary traction may be used preceding vest application. However, traction is contraindicated for type IIA fracture. In a recent retrospective study,[4] alignment and healing were better for type IIA than type II fractures.

The halo fixator may be used as a temporary or definitive stabilization method for a variety of subaxial cervical injuries. When reduction and alignment can be obtained and maintained, it may be used as definitive treatment of unilateral facet dislocation, stable burst fracture without neurologic deficit, multilevel cervical fracture, flexion-compression injury, and some hyperextension injuries.[5] In one study, halo treatment of so-called teardrop (flexion-compression) fracture with or without neurologic involvement resulted in clinical outcomes equivalent to anterior cervical fusion; radiographic alignment was better with surgery, however.[6]

In general, halo fixation is not recommended for definitive treatment of either bilateral facet dislocation or unstable burst fracture. Although the literature is sparse, I do not routinely treat flexion-compression injuries with neurologic deficit with halo fixation.[6]

Halo fixation may be problematic in the patient with spinal cord injury. Loss of protective sensation over the chest and back may lead to early skin breakdown. Restriction of chest wall expansion may lead to pulmonary complications in the patient with compromised secondary respiratory muscles (eg, paralyzed intercostals). Furthermore, the bulk of the device may hinder nursing care and delay rehabilitation.

Figure 2

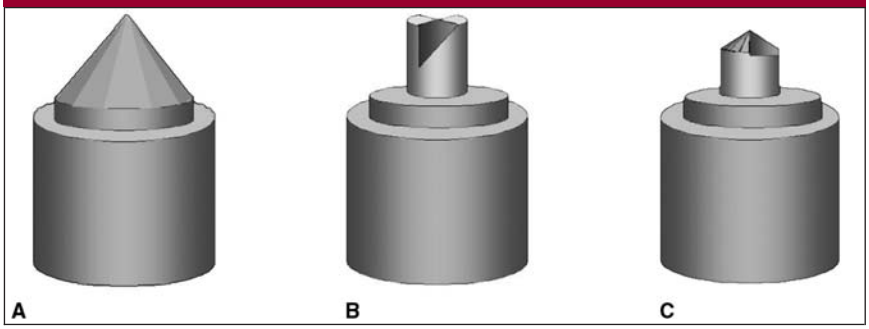

Pin tip design can influence the biomechanical strength and longevity of fixation of the halo fixator ring to the skull. **A,** The conventional conical pin tip design gains its immediate strength by embedding the tip of the pin into the cortical bone. Over time, the surrounding bone can resorb, leaving little fixation. **B,** Although the experimental cylindrical mill tip achieves better strength as the bone-pin forces are distributed about the circumference of the cylindrical tip, this pin design may have practical limitations because the flattened end may not easily pierce the soft tissues. **C,** The cylindrical trochar tip combines the advantages of a cylindrical tip with a sharp point to pierce the skin and periosteum.

Chronic Deformity

Beyond correction of acute traumatic cervical spine deformity, halo fixators have been used in varying forms to correct nontraumatic spinal deformity. In these applications, the fixator typically is used to deliver traction over time to slowly and partially correct deformity before definitive surgical correction. Depending on the size and weight of the patient, location of the deformity, and rigidity of the curve, countertraction of the lower portion of the body may be needed. This may be effected by a variety of distal pin sites, such as the pelvis or femur.[7,8]

Postoperative Use of the Halo Fixator

Some patients require additional immobilization to maintain alignment and promote bony fusion following open surgery of the cervical spine. Procedures that are often supplemented with halo fixation include multilevel corpectomy (three or more levels) with or without plate fixation, fixation of unstable upper cervical injury, stand-alone anterior or posterior stabilization of injuries with circumferential instability, and combined upper and lower cervical injury in which one of the two injuries is surgically treated. Other indications include sagittal plane correction procedures, such as corrective osteotomy for ankylosing spondylitis.[9]

Contraindications

Absolute contraindications to halo fixation include cranial fracture or bone deficiency and the presence of sepsis or severe soft-tissue injury. The patient who likely will require a craniotomy to treat an intracranial process (eg, subdural hematoma) may not be an ideal candidate for halo fixation.

Relative contraindications include severe chest trauma (eg, pulmonary contusion, pneumothorax, penetrating chest injury), obesity, and a barrel-shaped chest, which does not allow proper vest fit. A recent report highlighted the difficulty of intubating a patient with a halo fixator in place.[10] Thus, alternative methods of stabilization should be considered in the patient in whom intubation or reintubation is likely to be necessary. Because of high complication rates, advanced age (≥65 years) is considered by many to be a contraindication for halo treatment.[11,12]

Halo Biomechanics

Variables That Influence Stability

Pin Location

The pin-bone interface is the most common site of halo fixator failure. In an early study of anterior pin location, Ballock et al[13] found that the more cranial the pin insertion, the less rigid the construct. In relation to the eyebrow, the ideal pin position is 0.5 cm proximal. Pins placed 1 cm and 1.5 cm proximal were 10% and 30% less rigid, respectively. The authors concluded that the pin-bone relationship was the result of the angle at which the pin engaged the bone. In a later study in immature calf skulls, a similar relationship was found between the pin-bone angle and fixation strength.[14]

Pin Design

Pin design can influence stability. In a cadaveric study, Voor and Khalily[15] found that experimental pins with a cylindrical mill tip had greater stiffness than did conventional sharp, conical tips. However, the cylindrical mill tip pin may not easily pierce the skin and subcutaneous tissue, which may limit its potential clinical applicability. In a later study, Bullock and Runciman[16] compared conventional conical pin tips and the Voor and Khalily[15] experimental cylindrical mill tips with a trochar-style pin with a fluted, cylindrical, pointed tip. Theoretically, it seems as though such a tip would incorporate the biomechanical advantages of greater surface area engagement of the cylindrical design (Figure 2) without the need for a skin incision. Bullock and Runciman[16] found the vertical force of the trochar-style pin to be biomechanically superior to conventional pins and less affected by the presence of overlying periosteum.

Several studies have indicated that force at the pin-bone interface

decreases over time. In an in vivo study, Fleming et al[17] found that the compressive force at the pin site decreased by an average of 88% over a 3-month period, the typical duration of halo wear. Pins were tightened once to 6 in-lb of torque. In a later study, this same group confirmed these results, finding that the mean compressive force at the pin site decreased by 83% by the end of the treatment period.[18]

Ring Design

Pin force is influenced by the shape and material of the halo ring. Kerwin et al[19] found that pins inserted into graphite (carbon fiber) rings lost between 57% and 71% of their initial strength after tightening the lock nut. Pins placed in metal rings were much less susceptible to this phenomenon. The authors proposed that tightening the nut caused the pin to back out slightly. It is important to note that the investigators tightened the nut while holding the pin fixed with the wrench.

In a cadaveric study, Lerman and Haynes[20] demonstrated that closed halo rings result in greater rigidity than do open rings. Of note, the open rings tested did not have a transverse stabilizing component, which is standard on most contemporary designs. Such a stabilizing component would presumably increase the rigidity of the construct.

Vest Design

Vest design also may influence stability. Mirza et al[21] created simulated posterior ligamentous lesions at C5-6 in human cadaveric spines stabilized with a halo fixator. They found that increasing the tightness of the chest straps and decreasing vest deformation reduced angulation at the lesion. Wang et al[22] studied the effect of vest length on range of motion of the cervical spine in 20 normal, healthy men. The authors found that short vests that extend just to the nipple line can effectively immobilize upper cervical lesions (above C4). Lower lesions were best treated with vests that extend below the twelfth rib.

Krag and Beynnon[23] introduced a halo vest that consists of four chest pads (two lateral, one anterior, one posterior), which enables torso fixation without shoulder straps. A biomechanical study demonstrated that, compared with two other conventional designs, the four-pad vest produced the least number of distraction forces between the ring and the vest during all activities of daily living.

Restriction of Cervical Motion

The reported amount of intersegmental and global cervical spinal motion that is reduced by the halo has varied widely. In an in vivo radiographic study of 31 patients treated in a halo fixator for an unstable cervical injury, motion was more restricted below C2 than above.[24] Sagittal motion decreased by only 30% compared with normal. In an earlier study by Koch and Nickel,[25] motion was found to be reduced by 69%, with the most motion observed at the C2-C3 level and the least at the C7-T1 level. The marked difference between these studies is difficult to resolve. However, it might be explained by the fact that the former authors made measurements in various positions (ie, sitting and standing) and during various activities (ie, arm lifting, shoulder shrugging).

Anderson et al[2] compared lateral radiographs of 42 patients with cervical spine injuries in the supine and upright positions. They found an average angular change of 7° and an average change in translation of 1.7 mm at the injury site. The greatest change in motion (8°) at an uninjured segment occurred at the occipitocervical junction.

Halo Fixator Versus Other Braces

In a study of normal subjects, Johnson et al[26] found that a halo fixator allowed only 4% of normal sagittal motion, whereas a cervicothoracic brace allowed 13%, a four-poster brace allowed 21%, and a soft collar allowed 74% of normal sagittal motion. The halo allowed only 1% of normal rotation and 4% of lateral bending. In a more recent comparison in cadaveric spines with simulated odontoid fractures, Richter et al[27] found the halo to be far superior in restricting motion in all planes compared with a Miami J Collar (Össur, Paulsboro, NJ), Minerva brace, and a soft collar.

Although most studies have found the halo to be a superior method of immobilizing the cervical spine, Benzel et al[28] found greater flexion-extension movement in unstable injuries stabilized with a halo compared with a Minerva jacket. According to the authors, this was the result of a "snaking phenomenon" in which the neck muscles pull the individual vertebrae anteriorly or posteriorly with attempted flexion-extension against the rigid fixation of the head.

Recommended Imaging

When clinical suspicion warrants, a computed tomography (CT) scan of the skull should be obtained to ensure that there are no cranial fractures. CT is indicated in children younger than age 10 years to determine bone thickness and rule out cranial fracture. Careful clinical examination in an awake, alert patient can exclude the presence of cranial fracture without radiographic studies.

Technique

Patient Positioning

The patient is placed flat in the supine position. The head and neck are manually stabilized at all times and are maintained in neutral position. Several items should be available at the bedside: prepackaged halo fixator set (includes the halo ring,

Figure 3

A, Standard closed-ring halo design composed of stainless steel. **B,** Incomplete or open ring design made of lightweight aluminum. Note the transverse stabilizing bar, which was added to increase rigidity. **C,** An incomplete or open ring design made of carbon fiber (graphite), which is magnetic resonance imaging–compatible. Note the greater thickness of the carbon fiber ring compared with the metal rings. (Adapted from Botte MJ, Byrne TP, Abrams RA, Garfin SR: Halo skeletal fixation: Techniques of application and prevention of complications. *J Am Acad Orthop Surg* 1996;4:44-53.)

Figure 4

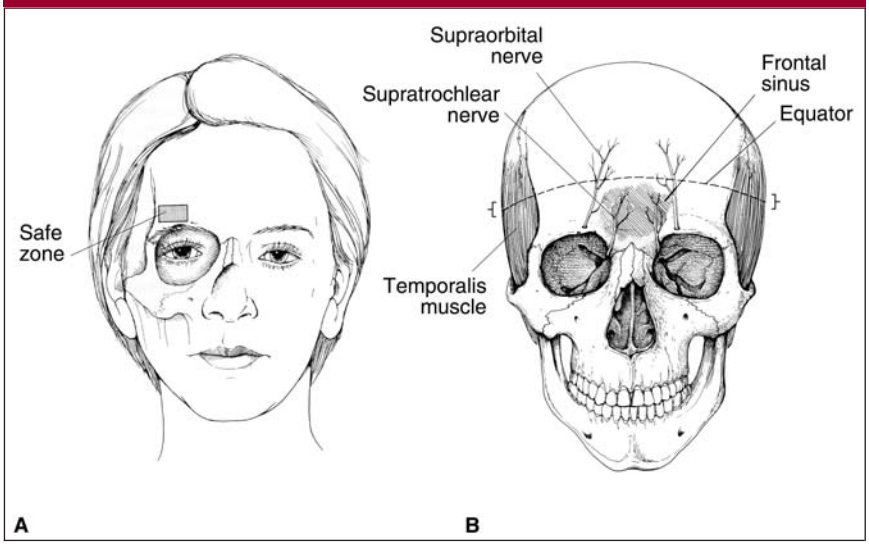

A, The safe zone for anterior pin insertion, an approximately 1-cm region just above the lateral one third of the orbit (eyebrow). **B,** Awareness of the safe zone avoids pin placement too far lateral within the thin temporal bone (deep to the temporalis muscle). In addition, it avoids injury to medial structures, including the supraorbital nerve, supratrochlear nerve, and frontal sinus. (Reproduced from Botte MJ, Byrne TP, Abrams RA, Garfin SR: Halo skeletal fixation: Techniques of application and prevention of complications. *J Am Acad Orthop Surg* 1996;4:44-53.)

pins, vest, pin torque wrench, nut wrench, extra padding; local anesthesia, syringes, and needles; skin razor; iodine-impregnated or chlorhexidine solution; and sterile gauze sponges.

Halo Ring Placement

The halo ring should be trial fitted to the head of the patient. Most halo systems offer a range of sizes (small, medium, large). The ring should not be >1 cm away from the skin and should not contact the skin or the ears at any point. Using a too-large ring can increase cantilever bending of the pins, which may predispose to loosening. In addition, if the ring is too large, the pins may not reach the cranium.

Some systems use a full circumferential halo ring; others use a partial ring with a transverse stabilizing bar (Figure 3). The advantage of a partial ring is that it is open posteriorly, which can facilitate ring positioning when the patient is lying supine. Full halo rings require the head to be elevated off the bed so that the ring is not pushed anterior. Optimal placement of a full halo ring is achieved by using stacked towels behind the head, neck, and torso. It is important not to elevate the head only, as this can potentially displace a cervical spine fracture.

To achieve ideal halo ring position, the anterior pin trajectories must be directed toward the safe zone, approximately 1 cm above the eyebrows and just above the pinnae, and at or below the equator of the skull. The safe zone is the 1 cm width of bone above the lateral border of the eyebrow (Figure 4). More lateral pin insertion risks penetration of the thin temporal bone. More medial positioning risks injury to the supraorbital and supratrochlear nerves. In the newest systems, the anterior pins can be adjusted to the exact desired position. Placement of the ring below the equator ensures that the pin will engage the bone close to or at a 90° angle, which is biomechanically desirable

Figure 5

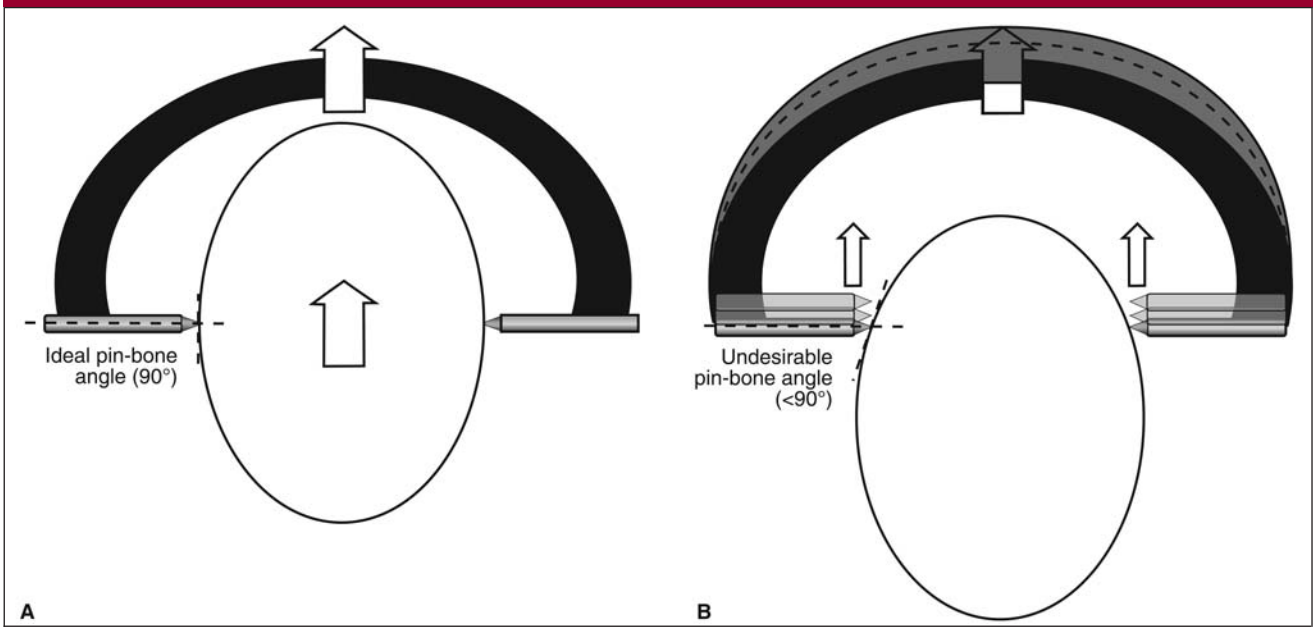

A, The ideal angle of pin insertion is 90°. This is ensured by placing the pin and ring at or near the so-called equator of the head. The arrows indicate that the force on the ring is fully transferred to the skull. **B,** Placing the pin and rings higher will engage the bone at an undesirable angle, which may allow the pin to dislodge more easily. In this scenario, the force on the ring (large arrow) is not fully transferred to the skull (small arrows).

(Figure 5). The safe zone for the posterior pins is substantially wider, placing less restriction on pin location. Ideally, the ring should be parallel to the transverse plane of the head. No portion of the ring should contact the pinnae of the ears because even slight pressure can lead to soft-tissue necrosis.

The proposed sites for the four pins are noted, and the area around the posterior pins is widely shaved. The sites are prepared with an iodine-impregnated or chlorhexidine solution. Next, local anesthesia is administered to the site, including the skin and periosteum.

The ring is placed once more into its ideal position and stabilized with temporary position blockers. The pins are then screwed into their respective holes on the halo ring. Once the anterior pin tip begins to engage the skin, the patient is asked to close his or her eyes. This avoids entrapping the orbicularis oculi muscles in the opened position. Skin incision is not required. During insertion, pins are alternately tightened. This maneuver helps maintain the position of the ring in relation to the head.

In the adult patient, pins are tightened to a uniform torque of 6 to 8 in-lb. Insertion torque is checked by a torque wrench or finger tightening break-off tabs. The lock nut is secured; this helps prevent the pin from backing out. The pins are retightened to similar torque 24 to 48 hours after placement. Vertullo et al[29] found a very low rate of pin site infection and loosening (1.1% and 3.7%, respectively) with a protocol that included retightening at 24 hours and 1 week after application.

Vest Placement

The vest may be placed before or after application of the ring. The vest consists of a posterior and an anterior half. The posterior half is placed first by log rolling the patient to one side while maintaining the neck in neutral position. This half of the vest is placed so that the inferior border is at the approximate level of the T11 or T12 vertebra. The patient is log rolled back to the supine position, and final adjustments to the posterior half of the vest are made. The anterior half is applied so that the inferior border is at the level of the xiphoid process. The two halves are then strapped to each other. It is important that the vest fit is sized appropriately for maximum stabilization.[21] Enough room for the chest to expand must be ensured; however, too much room may allow the vest to displace. In general, an ideal fit allows the surgeon to fit a flat hand snugly between the vest and the chest of the patient. This also facilitates skin care during the treatment period. Finally, the Velcro-fixed straps are secured over the patient's shoulders.

Fixing the Vest to the Ring

The ring is fixed to two connectors that run in an anteroposterior direc-

Figure 6

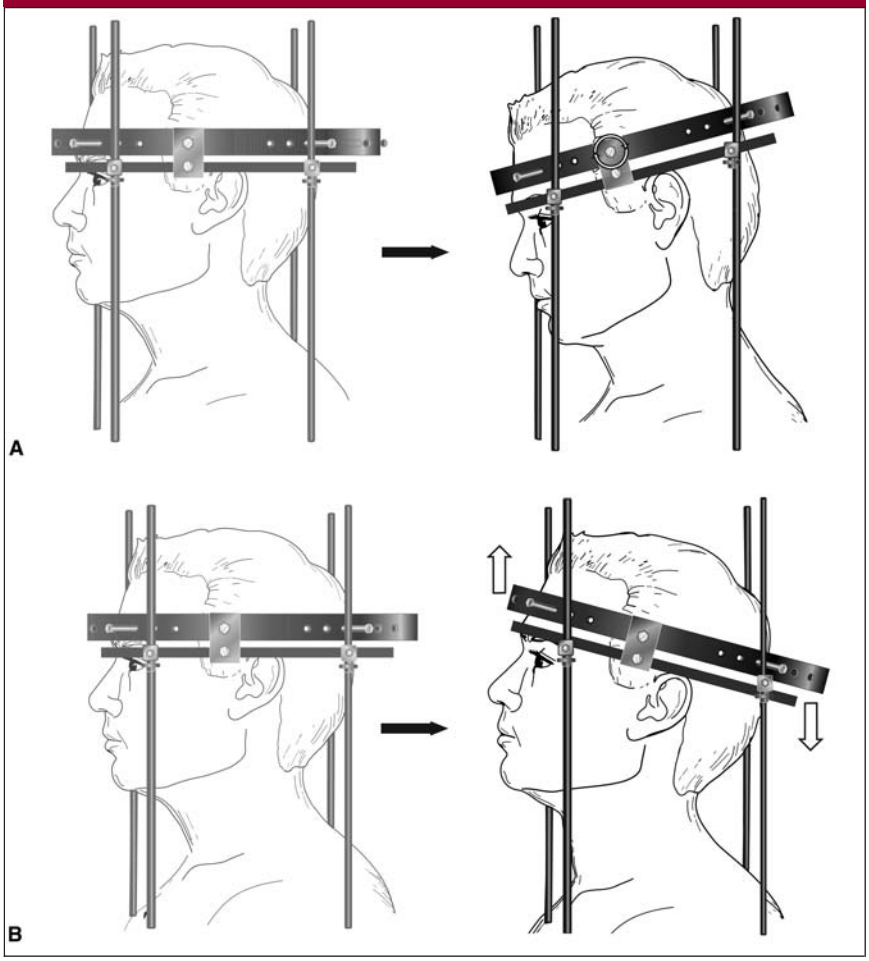

The two methods of adjusting sagittal angulation. **A,** Loosening the attachment of the halo ring to the anteroposterior rods allows the ring itself to be rotated about the axis of the screw articulation. *Left*, Head in neutral position. *Right*, Flexion adjustment. **B,** Loosening the attachments of the anterior and/or posterior rods allows appropriate anterior and posterior lengthening or shortening of the anteroposterior rod attachments to the longitudinal struts. *Left*, Head in neutral position. *Right*, Extension adjustment.

tion on the right and left side. This interface is adjustable in both rotation (angulation) and translation (Figure 1). Each connector is supported by two longitudinal posts that arise from the anterior and posterior parts of the vest. Ideally, when the head and neck can be maintained in a reduced position, the struts are fixed to the ring in situ. In reality, fitting the struts to the ring members can be a bit more cumbersome, which may necessitate additional adjustments to achieve optimal alignment. Once all components are attached, each connection should be checked again and retightened per the manufacturer recommendations. These connections will loosen over time and should be retightened at each office visit.

Adjusting the Alignment

Once the halo fixator is in position, additional adjustments to alignment may be made. Sagittal angulation is changed in two ways. The easiest is at the articulation of the halo ring and the anteroposterior connectors. The fixation bolt may be loosened to allow the head to pivot around the axis of the screw (Figure 6, A). It is important to note that this axis is rarely centered exactly at the fracture site. For example, with an odontoid fracture, adjusting flexion-extension about this articulation will undoubtedly cause some change in anteroposterior translation as well. The second way to adjust sagittal angulation is to lengthen along the anterior struts while shortening along the posterior struts (Figure 6, B). Care must be taken not to change the translational alignment during this maneuver.

Anteroposterior translation may be adjusted by bilaterally loosening the bolts along the anteroposterior connectors to allow the ring to slide forward or backward. Distraction across an injury may be achieved by simultaneously lengthening along the four longitudinal posts. Although this may achieve short-term correction, it is unlikely that long-term distraction will be maintained. Small adjustments in rotation are possible by loosening the attachments of all four longitudinal posts.

Special Considerations

Children

A CT scan of the head should be obtained before placement of a halo ring in children. Pin sites can be planned to avoid immaturely fused cranial sutures and thin cortices, a particular concern in infants.[30] The classic recommendation for the pediatric patient is to use a greater number of pins at a lower torque to fix the halo ring. Ten to 12 pins can be used in various locations, avoiding the thin bone of the temporal region and frontal sinuses. Pins are tightened to a torque of 2 in-lb. Smaller devices must be used, often necessitating a custom order to properly fit the patient. Some surgeons have successfully used four-pin constructs in older children (≥11 years), noting a similar complication rate as in those who had

multiple (>4) pin fixation.[31] The threshold age at which a four-pin versus a multiple-pin arrangement should be used has not been established.

Ankylosed Spine

Successful halo fixation treatment of fractures in an ankylosed spine has been reported.[32] However, it is important to understand some of the difficulties of this patient population. Although the application of the ring and vest are conceptually no different in patients with ankylosing spondylitis, kyphotic deformities of the cervical spine may make judging alignment challenging. One must consider the preexisting alignment of the spine before the injury and resist the temptation to extend the patient to "correct" the kyphosis.[33] A patient with significant deformity is at increased risk of skin ulceration at the cervicothoracic junction and rib cage.

Pin and Vest Care

Pin sites should be inspected daily for signs of infection, such as increasing redness, purulent drainage, and worsening pain. Methods of pin care vary from doing nothing (ie, observation) to cleaning daily with a saline, peroxide, or disinfectant solution. No data are available that assess the efficacy of pin care on complications.[34] In my experience, aggressive pin cleaning should be avoided because it tends to increase drainage of the pin sites. Others use protocols developed for external fixation pins, including daily cleaning with peroxide and saline to remove clots and allow drainage from around pins.

The skin underlying the vest should be inspected periodically. Food particles and other debris should be kept clear of the skin. The vest lining should be changed if it becomes damp or wet.

Outcomes

There are few recent published reports of the results of halo treatment for cervical spine injuries. In a recent systematic review of the literature concerning upper cervical injuries managed with halo fixation, Vieweg and Schultheiss[35] reported a healing rate of 83% for C1 arch fractures, 85% for isolated type II odontoid fractures, 67% for odontoid fractures with concomitant injuries, 97% for type III odontoid fractures, and 90% to 99% for C2 hangman's fractures. Romanelli et al[36] retrospectively reviewed their results of halo treatment of subaxial cervical injuries in 87 patients. They found that stage 4 and 5 flexion-compression injuries with facet subluxation were at high risk for failure with halo treatment.

Complications

Many device-related complications may occur with the use of a halo fixator. Pin loosening is the most common complication in adults,[34,37,38] occurring in as many as 36% of patients.[38] In adults, loosening is slightly more common with anterior pins than with posterior pins.[38] In children, anterior pin loosening also is predominant, occurring in up to 87% of pins.[31] A loose pin without signs of infection can be retightened one to two turns. When the pin remains loose after this maneuver, a new pin should be placed in another location. It is important to place the new pin within the safe zone.

Pin site infection is the second most common complication. Garfin et al[38] reported a 20% incidence in adults. Pin site infection is more common in children than adults, with reported rates of between 39% and 57%.[31,37] Infection may be superficial or deep. Superficial infections may not be associated with pin loosening. They can be treated with oral antibiotics (eg, oral cephalosporin), with or without pin removal. The usefulness of wound cultures is not known, and these cultures are not part of my routine practice. Deep infection may be associated with osteomyelitis or, rarely, intracranial abscess.[38] Deep infection requires pin removal, a new pin at a new site, débridement, and systemic antibiotics. Nemeth and Mattingly[39] reported that a six-pin construct resulted in increased stability without increasing the rate of pin-related complications; however, this is currently not considered standard practice in adults. Long-term pin complications include unsightly scars at the anterior pin sites (9% to 13%) and pain at the pin sites (13% to 18%).[31,38]

Skin breakdown (ie, pressure necrosis) has an incidence of from 2% to 11%.[34,38] It is more frequent in the elderly and the obtunded and is least common in children.[31] The most common site of skin breakdown is over the scapulae and the sternum.[34,38] Local wound care, consisting of débridement and wet-to-dry dressings, is recommended for the site that can be easily accessed. In some cases, the halo vest may need to be removed to properly care for the wound.

Less common device-related complications are generally more serious. The rate of intracranial penetration with dural puncture ranges from 1% to 4%.[31,34,38] Varying presentations of intracranial abscess complicating halo use also have been reported.[40,41] Supraorbital nerve injury has been reported in 2% to 3% of patients.[31,38] Difficulty swallowing (dysphagia) occurs in 2% of patients.[31,38] In some cases, this results from overextension of the neck, which is alleviated by adjusting the halo.

A higher rate of some complications has been reported with halo use in the elderly.[11,12] In a review of 53 patients with a mean age of 79.9 years, Horn et al[11] recorded 31 complications in 22 patients. Serious complications included respiratory distress in 4 (8%) and dysphagia in 6 (11%) of the 53 patients. Pin complications occurred in 10 patients (19%), a rate lower than that reported in patients who were not elderly.

Eight patients died during the treatment period. Only two of the deaths were "clearly unrelated to the halo," according to the authors. Tashjian et al[12] reviewed the results of 78 patients older than age 65 years with type II or III odontoid fracture who were treated with a variety of methods. Statistically higher mortality rates were found in those treated with a halo fixator compared with those treated with a cervical orthosis or surgery ($P = 0.03$).

Summary

Despite decreased use, halo fixators remain a useful method of stabilizing the cervical spine in adults and children. They are most commonly used for definitive treatment of some upper cervical injuries and as a postoperative adjunct to protect a surgical construct. High rates of serious complications in the elderly have been reported, although it is unclear whether these are the result of the device or the underlying condition of the patient. Newer designs have improved biomechanical stability; however, these do not appear to have decreased the rate of pin loosening or pin site infection, the two most common complications. Future efforts may be directed toward better identifying injury subgroups and patient host features that indicate ideal candidates for successful halo treatment.

References

Evidence-based Medicine: There are no level I/II studies cited. The majority of references are cohort-control, case reports, and biomechanical and clinical studies (level III/IV).

Citation numbers in **bold type** indicate references published within the past 5 years.

1. Perry J, Nickel VL: Total cervical spine fusion for neck paralysis. *J Bone Joint Surg Am* 1959;41:37-60.
2. Anderson PA, Budorick TE, Easton KB, Henley MB, Salciccioli GG: Failure of halo vest to prevent in vivo motion in patients with injured cervical spines. *Spine* 1991;16(suppl 10):S501-S505.
3. Majercik S, Tashijan RZ, Biffl WL, Harrington DT, Cioffi WG: Halo vest immobilization in the elderly: A death sentence? *J Trauma* 2005;59:350-356.
4. Vaccaro AR, Madigan L, Bauerle WB, Blescia A, Cotler JM: Early halo immobilization of displaced traumatic spondylolisthesis of the axis. *Spine* 2002;27:2229-2233.
5. Sears W, Fazl M: Prediction of stability of cervical spine fracture managed in the halo vest and indications for surgical intervention. *J Neurosurg* 1990;72:426-432.
6. Fisher CG, Dvorak MF, Leith J, Wing PC: Comparison of outcomes for unstable lower cervical flexion teardrop fractures managed with halo thoracic vest versus anterior corpectomy and plating. *Spine* 2002;27:160-166.
7. Huang MJ, Lenke LG: Scoliosis and severe pelvic obliquity in a patient with cerebral palsy: Surgical treatment utilizing halo-femoral traction. *Spine* 2001;26:2168-2170.
8. Cheung KM, Kwan EY, Chan KY, Luk KD: A new halo-pelvic apparatus. *Spine* 2003;28:305-308.
9. Belanger TA, Milam RA IV, Roh JS, Bohlman HH: Cervicothoracic extension osteotomy for chin-on-chest deformity in ankylosing spondylitis. *J Bone Joint Surg Am* 2005;87:1732-1738.
10. Sims CA, Berger DL: Airway risk in hospitalized trauma patients with cervical injuries requiring halo fixation. *Ann Surg* 2002;235:280-284.
11. Horn EM, Theodore N, Feiz-Erfan I, Lekovic GP, Dickman CA, Sonntag VK: Complications of halo fixation in the elderly. *J Neurosurg Spine* 2006;5:46-49.
12. Tashjian RZ, Majercik S, Biffl WL, Palumbo MA, Cioffi WG: Halo-vest immobilization increases early morbidity and mortality in elderly odontoid fractures. *J Trauma* 2006;60:199-203.
13. Ballock RT, Lee TQ, Triggs KJ, Woo SL, Garfin SR: The effect of pin location on the rigidity of the halo pin-bone interface. *Neurosurgery* 1990;26:238-241.
14. Copley LA, Pepe MD, Tan V, Sheth N, Dormans JP: A comparison of various angles of halo pin insertion in an immature skull model. *Spine* 1999;24:1777-1780.
15. Voor MJ, Khalily C: Halo pin loosening: A biomechanical comparison of experimental and conventional designs. *J Biomech* 1998;31:397-400.
16. Bullock SJ, Runciman RJ: Biomechanical evaluation of two halo pin designs, with, and without, intact periosteum. *J Biomech* 2001;34:129-133.
17. Fleming BC, Huston DR, Krag MH, Sugihara S: Pin force measurement in a halo-vest orthosis, in vivo. *J Biomech* 1998;31:647-651.
18. Fleming BC, Krag M, Huston DR, Sugihara S: Pin loosening in a halo-vest orthosis: A biomechanical study. *Spine* 2000;25:1325-1331.
19. Kerwin GA, Chou KL, White DB, Shen KL, Salciccioli GG, Young KH: Investigation of how different halos influence pin forces. *Spine* 1994;19:1078-1081.
20. Lerman JA, Haynes RJ: Open versus closed halo rings: Comparison of fixation strengths. *Spine* 2001;26:2102-2104.
21. Mirza SK, Moquin RR, Anderson PA, Tencer AF, Steinmann J, Varnau D: Stabilizing properties of the halo apparatus. *Spine* 1997;22:727-733.
22. Wang GJ, Moskal JT, Albert T, Pritts S, Schuch CM, Stamp WG: The effect of halo-vest length on stability of the cervical spine: A study in normal subjects. *J Bone Joint Surg Am* 1988;70:357-360.
23. Krag MH, Beynnon BD: A new halo-vest: Rationale, design and biomechanical comparison to standard halo-vest designs. *Spine* 1988;13:228-235.
24. Lind B, Sihlbom H, Nordwall A: Forces and motions across the neck in patients treated with halo-vest. *Spine* 1988;13:162-167.
25. Koch RA, Nickel VL: The halo vest: An evaluation of motion and forces across the neck. *Spine* 1978;3:103-107.
26. Johnson RM, Hart DL, Simmons EF, Ramsby GR, Southwick WO: Cervical orthoses: A study comparing their effectiveness in restricting cervical motion in normal subjects. *J Bone Joint Surg Am* 1977;59:332-339.
27. Richter D, Latta LL, Milne EL, et al: The stabilizing effects of different orthoses in the intact and unstable upper cervical spine: A cadaver study. *J Trauma* 2001;50:848-854.
28. Benzel EC, Hadden TA, Saulsbery CM: A comparison of the Minerva and halo jackets for stabilization of the cervical spine. *J Neurosurg* 1989;70:411-414.
29. Vertullo CJ, Duke PF, Askin GN: Pin-site complications of the halo thoracic brace with routine pin re-

tightening. *Spine* 1997;22:2514-2516.
30. Letts M, Kaylor D, Gouw G: A biomechanical analysis of halo fixation in children. *J Bone Joint Surg Br* 1988; 70:277-279.
31. Dormans JP, Criscitiello AA, Drummond DS, Davidson RS: Complications in children managed with immobilization in a halo vest. *J Bone Joint Surg Am* 1995;77:1370-1373.
32. Graham B, Van Peteghem PK: Fractures of the spine in ankylosing spondylitis: Diagnosis, treatment, and complications. *Spine* 1989;14:803-807.
33. Bono CM, Min W: Avoiding complications in patients with ankylosing spondylitis undergoing spine surgery. *Curr Opin Orthop* 2005;16:178-183.
34. Glaser JA, Whitehill R, Stamp WG, Jane JA: Complications associated with the halo-vest: A review of 245 cases. *J Neurosurg* 1986;65:762-769.
35. Vieweg U, Schultheiss R: A review of halo vest treatment of upper cervical spine injuries. *Arch Orthop Trauma Surg* 2001;121:50-55.
36. Romanelli DA, Dickman CA, Porter RW, Haynes RJ: Comparison of initial injury features in cervical spine trauma of C3-C7: Predictive outcome with halo-vest management. *J Spinal Disord* 1996;9:146-149.
37. Baum JA, Hanley EN Jr, Pullekines J: Comparison of halo complications in adults and children. *Spine* 1989;14: 251-252.
38. Garfin SR, Botte MJ, Waters RL, Nickel VL: Complications in the use of the halo fixation device. *J Bone Joint Surg Am* 1986;68:320-325.
39. Nemeth JA, Mattingly LG: Six-pin halo fixation and the resulting prevalence of pin-site complications. *J Bone Joint Surg Am* 2001;83:377-382.
40. Papagelopoulos PJ, Sapkas GS, Kateros KT, Papadakis SA, Vlamis JA, Falagas ME: Halo pin intracranial penetration and epidural abscess in a patient with a previous cranioplasty: Case report and review of the literature. *Spine* 2001;26:E463-E467.
41. Goodman ML, Nelson PB: Brain abscess complicating the use of a halo orthosis. *Neurosurgery* 1987;20:27-30.